## Conical tube expander type BR H04/H06

for conical expanding of tube ends.
Range of tubes from 9,6 up to 59,0 mm ID.
Available drive squares
9,0 / 12,0 / 14,0 / 16,0 / 18,0 mms.

**fig.: conical tube expander type BR H04**

| SIZE | complete tool with flush collar Ref.-No.. | complete tool with holding device Ref.-No.. | mandrel Ref.-No.. | rolls Ref.-No.. | cage Ref.-No.. | range in mm tube ID | range in mm mandrel square |
|---|---|---|---|---|---|---|---|
| 9,6 | W00496000 | W00696000 | W14596000 | W20596000 | W30596000 | 9,6 - 12,0 | 9 |
| 10,6 | W00497000 | W00697000 | W14597000 | W20597000 | W30597000 | 10,6 - 13,0 | 9 |
| 11,6 | W00498000 | W00698000 | W14598000 | W20598000 | W30598000 | 11,6 - 15,5 | 9 |
| 12,6 | W00499000 | W00699000 | W14599000 | W20599000 | W30599000 | 12,6 - 15,7 | 9 |
| 13,6 | W00401000 | W00601000 | W14501000 | W20501000 | W30501000 | 13,6 - 16,7 | 9 |
| 14,6 | W00402000 | W00602000 | W14502000 | W20502000 | W30502000 | 14,6 - 18,2 | 9 |
| 15,5 | W00403000 | W00603000 | W14503000 | W20503000 | W30503000 | 15,5 - 19,6 | 9 |
| 16,4 | W00404000 | W00604000 | W14504000 | W20504000 | W30504000 | 16,4 - 21,4 | 9 |
| 17,4 | W00405000 | W00605000 | W14505000 | W20505000 | W30505000 | 17,4 - 22,4 | 9 |
| 18,4 | W00406000 | W00606000 | W14506000 | W20506000 | W30506000 | 18,4 - 23,9 | 9 |
| 19,0 | W00407000 | W00607000 | W14507000 | W20507000 | W30507000 | 19,0 - 24,5 | 9 |
| 20,0 | W00408000 | W00608000 | W14508000 | W20508000 | W30508000 | 20,0 - 25,5 | 9 |
| 21,0 | W00409000 | W00609000 | W14509000 | W20509000 | W30509000 | 21,0 - 26,5 | 9 |
| 22,0 | W00410000 | W00610000 | W14510000 | W20510000 | W30510000 | 22,0 - 27,5 | 12 |
| 23,0 | W00411000 | W00611000 | W14511000 | W20511000 | W30511000 | 23,0 - 29,0 | 12 |
| 24,0 | W00412000 | W00612000 | W14512000 | W20512000 | W30512000 | 24,0 - 30,0 | 12 |
| 25,0 | W00490000 | W00690000 | W14590000 | W20590000 | W30590000 | 25,0 - 31,0 | 12 |
| 26,0 | W00413000 | W00613000 | W14513000 | W20513000 | W30513000 | 26,0 - 32,0 | 12 |
| 27,0 | W00491000 | W00691000 | W14591000 | W20591000 | W30591000 | 27,0 - 33,0 | 12 |
| 28,0 | W00414000 | W00614000 | W14514000 | W20514000 | W30514000 | 28,0 - 34,0 | 12 |
| 29,0 | W00492000 | W00692000 | W14592000 | W20592000 | W30592000 | 29,0 - 35,0 | 12 |
| 30,0 | W00415000 | W00615000 | W14515000 | W20515000 | W30515000 | 30,0 - 36,0 | 14 |
| 32,0 | W00416000 | W00616000 | W14516000 | W20516000 | W30516000 | 32,0 - 38,0 | 14 |
| 34,0 | W00417000 | W00617000 | W14517000 | W20517000 | W30517000 | 34,0 - 40,0 | 14 |
| 36,0 | W00418000 | W00618000 | W14518000 | W20518000 | W30518000 | 36,0 - 42,0 | 14 |
| 38,0 | W00419000 | W00619000 | W14519000 | W20519000 | W30519000 | 38,0 - 44,0 | 16 |
| 40,0 | W00420000 | W00620000 | W14520000 | W20520000 | W30520000 | 40,0 - 47,0 | 16 |
| 42,0 | W00421000 | W00621000 | W14521000 | W20521000 | W30521000 | 42,0 - 50,0 | 16 |
| 44,0 | W00422000 | W00622000 | W14522000 | W20522000 | W30522000 | 44,0 - 53,0 | 18 |
| 46,0 | W00423000 | W00623000 | W14523000 | W20523000 | W30523000 | 46,0 - 55,0 | 18 |
| 48,0 | W00424000 | W00624000 | W14524000 | W20524000 | W30524000 | 48,0 - 57,0 | 18 |
| 50,0 | W00425000 | W00625000 | W14525000 | W20525000 | W30525000 | 50,0 - 59,0 | 18 |

· TECHNODATA GmbH · Leverkuser Strasse 65 · D-42897 Remscheid ·
· Phone +49 2191 463 10 0 · Fax +49 2191 463 10 11 · info@tda-gmbh.de http://www.tda-gmbh.com

## Expanding of tubes in tube sheets

A tight and resistant joint between tube and tube sheet will be obtained when deforming the tube by tube rolling (expanding) process plastically and the tube sheet elastically.
During the expansion process the tube enlarges, until it has contact with the tube sheet bore (this is called metal-to-metal contact).
In order to obtain a tight and resistant joint, the expansion process has to be continued. As the tube sheet bore is a restraining barrier, further expansion deforms the tube metal and forces it into more intimate contact with the tube sheet metal. During this process the tube wall is constantly thinning (this is called tube wall reduction). The tube sheet bore slightly enlarges as well. But it has to be guaranteed, that it shrinks back when the expansion process is finished. The final result of the tube rolling operation is a joint condition similar to a shrink-fitted joint.

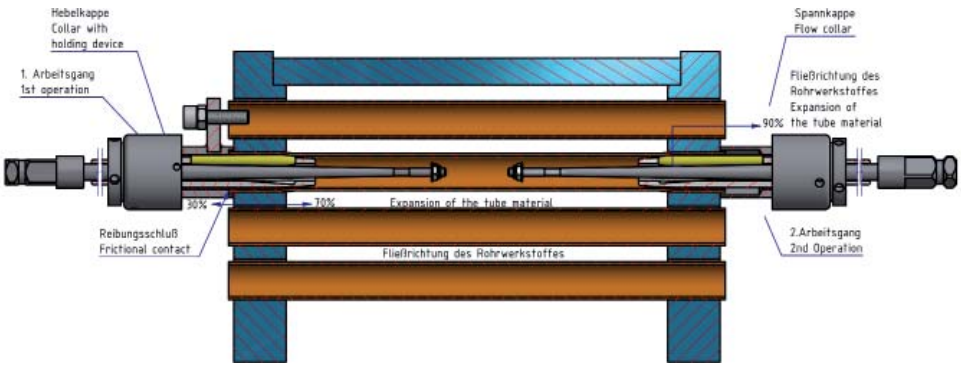


The amount of expansion has to be selected, ensuring that the shrinking effect of the tube sheet bore is still guaranteed. Otherwise the tube wall reduction has to be effected as far as necessary in order to obtain a leak-proof and resistant joint.

A lot of experiences have shown, that for an optimal result the yield strength of the tube material should be about 20% less than the yield strength of the tube sheet material.
If the tube sheet material deforms plastically as a result of over-rolling the tube end, a tight and resistant fit of the tube end can not be guaranteed any more.
If the difference in yield-strength of tube and tube sheet material is substancial, over-rolling may cause destroying the tube material. Flakes may occur. Over-rolling in many cases causes corrosion and crevecis.

There are many methods to calculate the tube wall reduction.
Please call or write to us if you want further information.

## Calculation of the expansion rate

Use tube wall reduction listed in the "tube expansion" column plus clearance between tube O.D. and tube sheet hole, added to the tube I.D. before expansion, giving the final tube I.D. after expansion. Measured tube I.D. after expansion may vary plus or minus .001" or 0.025 mm from calculated finished I.D.+

Below is listed an example of how to calculate the tube expansion with a given percentage of tube wall reduction as well as the method of calculating the expansion value of ONE wall of measured tube I.D. (Remark = TWO wall).

The double percent reduction of the tube wall thickness caused through the tube expansion is called optimum expansion strength.

$$\text{o.e.s.} = \frac{2\ (S1 - S2)}{S1} \text{ x } 100\ (\%)$$

o.e.s. = optimum expansion strength
S1 = tube wall thickness before expanding
S2 = tube wall thickness after expanding

This calculation will be explained with an example:

actual measured tube dimension: 19,05 x 1,65 mm
actual tube sheet bore: 19,25 mm

Up to the metal-to-metal contact the following calculation results:

d1 = B - 2 x S1
= 19,25 mm - 2 x 1,65 mm = 15,95 mm
B = diameter of the bore
d1 = theoretical inside diameter at metal-to-metal contact

The tube wall reduction resulting from the expansion should be approx. 0,08 mm.

The inside diameter enlarges up to:

d2 = d1 + 2 x 0,08 mm
= 15,95 mm + 0,16 mm = 16,11 mm
d2 = inside diameter after the expansion

The optimum expansion strength will therefore be:

$$\text{o.e.s.} = \frac{2\ (1{,}65\ -\ 1{,}57)}{1{,}65} \text{ x } 100\ (\%)$$

= 9,7 % = rounded off to 10 %.

If an expansion limit of o.e.s. = 10% has to be reached, the dimension of the inside diameter after the expansion will be calculated as follows:

d2 = d1 + o.e.s. x S1

$$d2 = 19{,}25 \text{ mm} - (2 \text{ x } 1{,}65 \text{ mm}) + \frac{10 \text{ x } 1{,}65}{100}$$

= 19,25 mm - 3,3 mm + 0,165 = 16,115 mm

**With an inside diameter after the expansion of 16,115 an expansion limit of 10% reached.**

## self-feeding tube expanders type BR 30

our tube expanders type BR 30 and BR 40 are similar with tube expanders series K+B 80-86 (BR 30), and series T54 & T56 a+b (BR 40).
the series 30 are equipped with standards in roll length from 40 / 50 / 60 mm with adjustable effective exp. roll length, also reach of 50 / 70 / 100 / 150 / 200 mms.
for this kind of tube expander you can choose between 4 different types of collars

**flush collar**

blocking the accretion of the tube length during the expanding process, thereby flush position of the tube after expanding process, also light expanding after welding.

**collar with holding device**

blocking of the turning tube with stop of the lever in the beside tube, flush position of the tube after expanding process. To hold the loose tubes at the beginning of the expanding process at the first tube sheet side.

**flow collar**

collar with recess to intake the accretion of the tube length of the tube material, 2nd tube sheet.

**expanding collar**

Inside collar is lying on the expanding rolls, that implies that there is no accretion of the tube length and no damage of thinwall tubes (<= 1,0 mm)

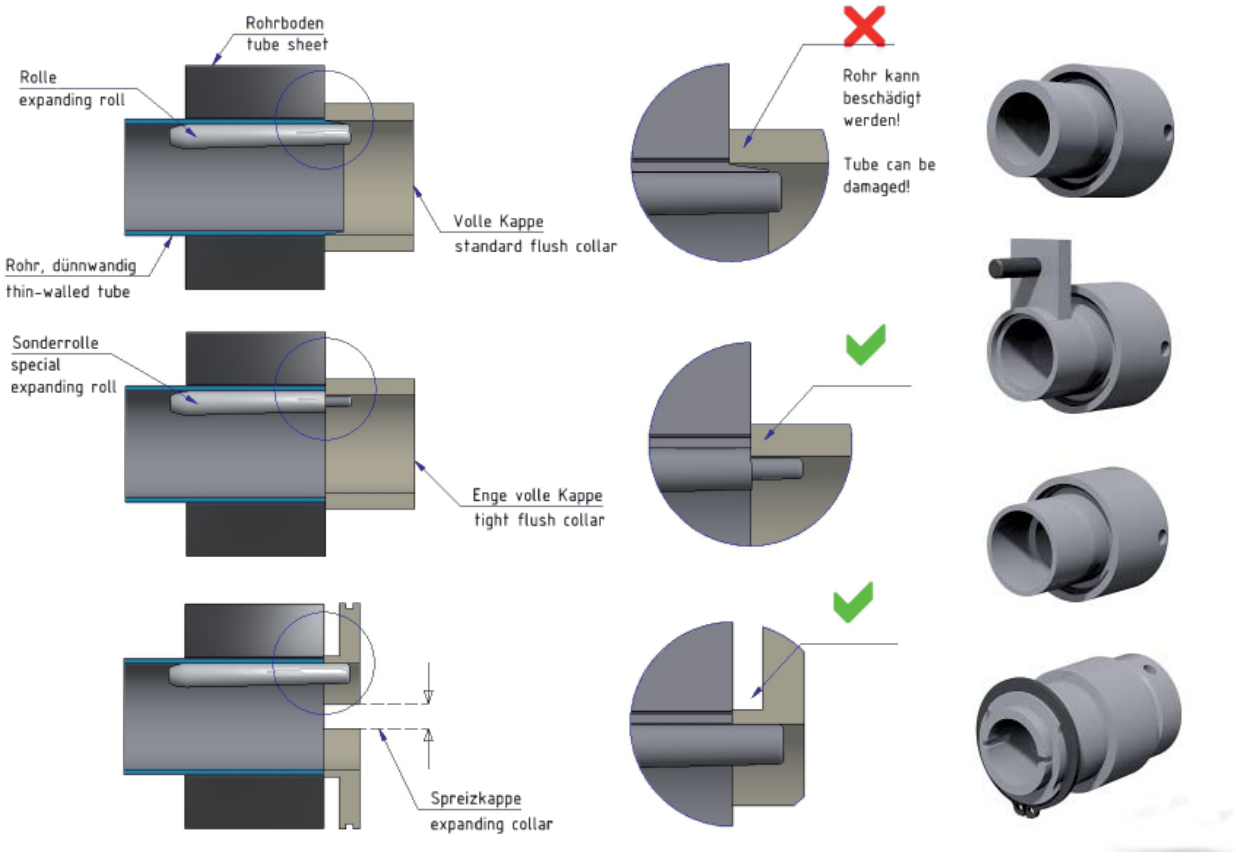

# COMPARISON SHEET

| Tube expanding with Self feeding tube expanders | Tube expanding with mechanical-hydraulic tube expanders BR 20 |
|---|---|
| Tube expander with inclined rolls.<br>No cylindrical tube expansion possible. | Tube expander with „inline“ rolls.<br>Cylindrical tube expansion possible.<br>Extremely important when expanding **thin walled** tubes. |
| Only „point-contact“ between mandrel and rolls<br>Point-contact causes higher wear of rolls and mandrels. | „Line - contact“ between mandrel and rolls.<br>Line contact of rolls and mandrel causes less wear. |
| Expanding area must end 3-5 mms before back tube sheet face.<br>Creates always a gap at back side of tube-tube sheet joint (crevice !) | Due to „inline“ rolls the rolls have line contact with the mandrel. Therefore the rolls cannot„swivel“. Tube expansion can be executed **completely up to the back side of tube sheet**. No gap at this point. |
| Mandrel feed not controlled, self-feeding procedure because of inclined rolls. | Mandrel feed is **contolled** by hydraulic mandrel feeding system. |
| Kind and variing quantity of greasing creates **different slippage** during expanding process. | **No slippage effect** due to controlled mechanical hydraulic mandrel feeding. |
| **Mandrel feed rate** given by geometry of the tube expander<br>-- Mandrel / Roll taper<br>-- Mandrel / Roll diameter ratio<br>-- roll inclination degree and other conditions | **Mandrel feed rate** controlled by speed of hydraulic mandrel feeding system (adjustable)<br>Enables controllable tube deformation speed during expanding process |
| **Material deforming speed** only controlled by speed of driving motor. | **Material deforming speed** controlled by effective mandrel feed rate and motor **speed**<br>Better for the material / Less time is required |
| **No „ironing out“- process** when reaching predetermined tube expansion. | Time-adjustable **„ironing out“ process** after reaching predetermined tube expansion. |
| **No round expansion** possible. | **Round expansion** possible.<br>Extremely **important** when expanding **thin-walled** tubes. |
| Requires **greater wall reduction** with the effect of negative tube treatment and greater potential for ligament movement during expansion process. Higher risk of metal flaking. | Requires l**ower wall reduction** avoiding all the disadvantages of the self-feeding tube expansion process. |
| High tendency of **twisting stress.** | Low tendency of **twisting stress** |
| Remarkable **tube lengthening** because of higher expansion rate and inclined rolls. | Lower expansion rate and „inline“ rolls cause far **less tube lengthening**. |
| | **Summary of effects on metallurgy:**<br>- Lower strain hardening rates.<br>- Reduced potential for stress corrosion cracking in the transition areas.<br>- Grain structure change is greatly reduced.<br>- Effective tube expansion length to the end of tube sheet thus avoiding crevice- and corrosion potential.<br>- Reduced failure potential of tube by expanding within deformation rate of material.<br>- greater care of material. |

## Mechanical-hydraulic tube expanding unit type NFAB-H

The mechanical-hydraulic tube expanding unit is used for exact and repeatable power control of driving motors for tube expanding work, connected with a hydraulic device for precise mandrel pushing.
The electronic measurement and control of the electric power enables for precise breaking torque and guaranties repeatability of the expanding rate.
Mandrel feed is independ and controlled by the hydraulic feeding device using tube expanders with straight rollers. Therefore the tube expanding procedure is much more adaptable to the expanding requirements than by using self feeding tube expanders.The expansions are cylindrical and absolutely round. A cooling and lubricating system is integrated and creates lower tooling costs.

## Technical Data :

- mains connection: 400 V / 3 - phase / 50/60 Hz other types on request
- output: 42 V / 3 - phase / 50/60 Hz
- output power: max. 1,9 KVA
- hydraulic device with independent pressure and volume control by means of electronic proportional valves ( max: 200 bar/ 3 liters/min )
- pulse controlled cooling and lubricating system ( lubricant and air independently adjustable ) ( air pressure max. 6 bar / lubricant reservoir appr. 3 liters )
- integrated power recorder
- phase sequence switch
- hand-switch
- integrated control panel with display and function keys for preselection of following parameters:
- automatic zero setting to compensate different no - load power of driving motors
- breaking power input
- adjustable reverse time (1 - 99 sec)
- adjustable delay time (1 - 99 sec)
- automatic restart of the expanding cycle
- mandrel speed adjustable
- operating pressure adjustable (max. 200 bar)
- pressure delay time for rounding out
- mandrel reverse pressure adjustable
- recording frequency for power recorder adjustable

## Options:

trolley extension:
- frame with height adjustable cross bar for supporting the driving motor
- supporting legs to increase the stability
- swivelling support arm for supporting the feeding device

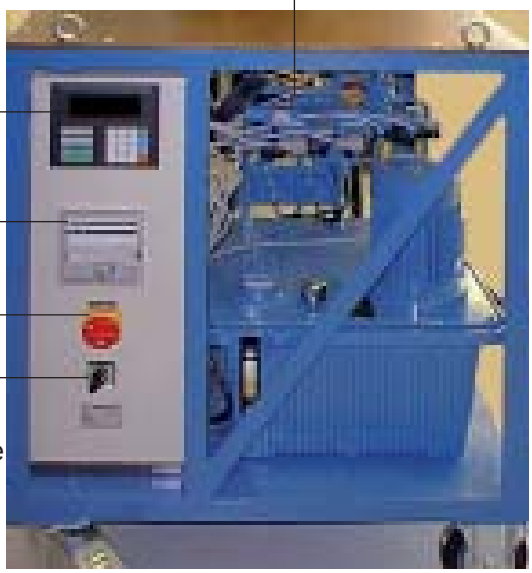


- all parts of the unit are mounted on a trolley, suitable for the crane
- size ( L/W/H): 900 x 900 x 1200 mms
- weight: appr. 190 kgs

**Driving motor with feeding device and gear box (compact design)**

**Mechanical-hydraulical tube expanding system type NFAB-H complete with driving motor type D-532 telescopic shaft TS 72 size 2 - MT3 and mandrel feeding device with tool holder**

# Accessories for mech.-hydr. tube expanding unit type NFAB-H

## TOOL HOLDER


**tool holder size 2**
for feeding device cylinder size 2
to accomodate tube expanders type BR 20

**tool holder size 3**
for feeding device cylinder size 3
or cylinder size 2 with enforced cooling system,
to accomodate tube expanders type BR 20

| Art.-Nr. | tool holder | for CAGE Ø | Art.-Nr. | tool holder | for CAGE Ø | Art.-Nr. | tool holder | for CAGE Ø |
|---|---|---|---|---|---|---|---|---|
| | | | | | | | | |
| 12610008 | size 1 | 10,0 mm | 22610008 | size 2 | 10,0 mm | 32620517 | size 3 | 20,5 - 22,0 mm |
| 12610608 | size 1 | 10,6 - 11,4 mm | 22610608 | size 2 | 10,6 - 11,4 mm | 32623020 | size 3 | 23,0 - 24,0 mm |
| 12612010 | size 1 | 12,0 mm | 22612010 | size 2 | 12,0 mm | 32625022 | size 3 | 25,0 - 26,0 mm |
| 12612610 | size 1 | 12,6 - 13,8 mm | 22612610 | size 2 | 12,6 - 13,8 mm | 32627024 | size 3 | 27,0 - 29,0 mm |
| 12614512 | size 1 | 14,5 - 15,5 mm | 22614512 | size 2 | 14,5 - 15,5 mm | 32631028 | size 3 | 31,0 - 32,0 mm |
| | | | 22616014 | size 2 | 16,0 - 17,5 mm | 32634528 | size 3 | 33,0 - 34,0 mm |
| | | | 22618416 | size 2 | 18,4 - 19,5 mm | 32635028 | size 3 | 34,5 mm |
| | | | 22620017 | size 2 | 20,0 mm | 32636028 | size 3 | 36,0 - 42,0 mm |
| | | | 22620517 | size 2 | 20,5 - 22,0 mm | 32644028 | size 3 | 44,0 - 46,0 mm |

**mandrel feeding device cylinder with enforced cooling system,**
to accomodate tool holder

usable with telescopic shafts or compact unit

## BOILER TUBE EXPANDERS

Type KA 64 / KB 65 / KC 66 / KD 67

with stop type **KA 64** or with ball beared stop type **KB 65** are available in standard effective roller length 25 mms, 32 mms, 38 mms, 45 mms, 50 mms, 56 mms and 62 mms.Boiler expanders type **KD 67** are designed for expanding and flaring in one operation, with adjustable ball - bearing stop (bell expanding of tube extraction), flaring 18° or 20° both sides of tube axis; to get a basic flaring and no edges of the tube at the flaring seat.

Boiler expanders type **KC 66** like type **KD 67**, but without stop.

All types of boiler expanders are available with or without roll retainer.

**TYPE KA 64**
expanding with stop and sliding washer for manual operation

**TYPE KB 65**
expanding with ball - bearing stop for manual or mechanical operation

**TYPE KC 66**
expanding and flaring
( flare angel 15° )
in one operation for manual operation

**TYPE KD 67**
expanding and flaring
( flare angel 15° )
in one operation, with adjustable ball bearing stop for manual or mechanical operation

***For detailed technical information please contact your customer service !***

## Automatic Tube Expanders „ULTRA“

with built- in compression spring and with preset torque for the expanding of tubes. Beginning of expansion with clutch pins engaged Automatic disengagement. Clutch pins finally are disconnected.

## Double spindle device

The adaption of the double spindle device with TDA driving motors allows the rolling of two tube with the selected torque value at the same time. CW and CCW turning tube expanders will be use

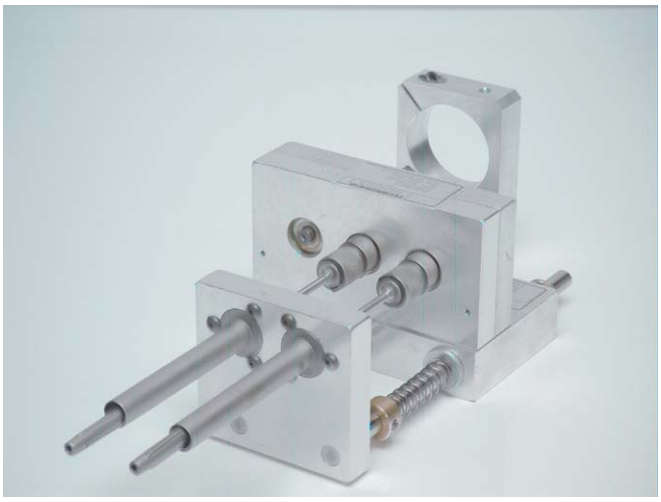

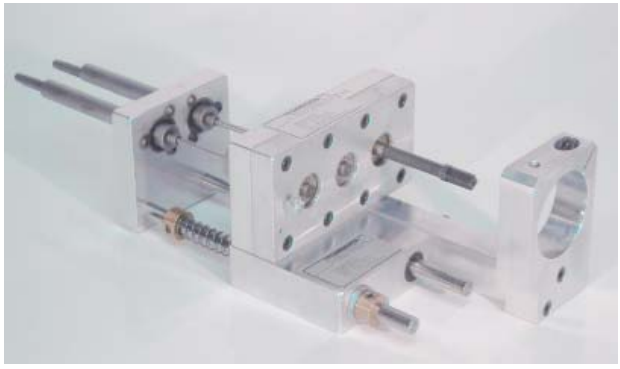

## TUBE EXPANDERS Series 800

**Tube expanders series 800** — 3-roller type

| TUBE ID Ø | mm | inch |
|---|---|---|
| min. | 8,48 | 0,334 |
| max. | 26,90 | 1,027 |

| TUBE OD Ø | mm | inch |
|---|---|---|
| min. | 12,7 | 1/2 |
| max. | 28,5 | 1-1/8 |

effect. Roller length min. 12,7 mm / 1/2"
max. 57,1 mm / 2-1/4"

**Tube expanders series 800-5** — 5-roller type

| TUBE ID Ø | mm | inch |
|---|---|---|
| min. | 12,98 | 0,509 |
| max. | 36,68 | 1,44 |

| TUBE OD Ø | mm | inch |
|---|---|---|
| min. | 15,8 | 5/8 |
| max. | 38,1 | 1-1/2 |

effect. Roller length min. 12,7 mm / 1/2"
max. 57,1 mm / 2-1/4"

## TUBE EXPANDERS Series 1200

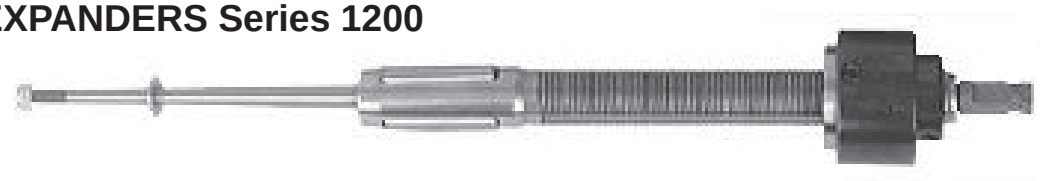

**Tube expanders series 1200** — **3-roller type**

| TUBE ID Ø | mm | inch |
|---|---|---|
| min. | 8,48 | 0,334 |
| max. | 36,32 | 1,430 |

| TUBE AD Ø | mm | inch |
|---|---|---|
| min. | 12,7 | 1/2 |
| max. | 38,1 | 1-1/2 |

**effect. Roller length** min. 38,1 mm / 1-1/2"
max. 171,4 mm / 6-3/4"

**REACH**; tube expanders with roller length 38,1 mm (1-1/2")

| | | | | |
|---|---|---|---|---|
| STANDARD | 12,7 mm | bis | 152,4 mm | *1/2" bis 5-1/4"* |
| Typ "A" | 12,7 mm | bis | 203,1 mm | *1/2" bis 7-1/4"* |
| Typ "C" | 12,7 mm | bis | 304,6 mm | *1/2" bis 11-1/4"* |

**Tube expanders series 1200-5** — **5-roller type**

| TUBE ID Ø | mm | inch |
|---|---|---|
| min. | 14,83 | 0,584 |
| max. | 36,32 | 1,430 |

| TUBE AD Ø | mm | inch |
|---|---|---|
| min. | 19,0 | 3/4 |
| max. | 38,1 | 1-1/2 |

**effect. Roller length** min. 38,1 mm / 1-1/2"
max. 171,4 mm / 6-3/4"

**REACH**; tube expanders with roller length 57,1 mm (2-1/4")

| | | | | |
|---|---|---|---|---|
| STANDARD | 31,7 mm | bis | 171,4 mm | *1-1/4" bis 6"* |
| Typ "A" | 31,7 mm | bis | 222,1 mm | *1-1/4" bis 8"* |
| Typ "C" | 31,7 mm | bis | 323,6 mm | *1-1/4" bis 12"* |

**SPECIAL SIZES or solutions on request, contact customer service !**

## WATER SOLUBLE OIL & WATER SOLUBLE GREASE

Rolling in corresponds to cold-rolling sheet metal, here developed to prevent for friction and heating up. In order to extend the service life of the tube expanders , as well as a material indulgence to reach is a lubrication/cooling by appropriate oil or grease indispensably. In different quantity sizes available.

**WATER SOLUBLE GREASE**
using range -20°C thru +110°C
good-responsible, wear-reducing

**WATER SOLUBLE OIL type HZ-22**
rarefiable, high corrosion protection,
for all metals applicable.

## TUBE EXPANDERS Series BR 10 Quick step

our quick step tube expanders are suited for tube rolling in thick tube sheets. the cage of the expander has grooves that accept a spring loaded, quick action collar that permits step rolling through the full thickness of the tube sheet.

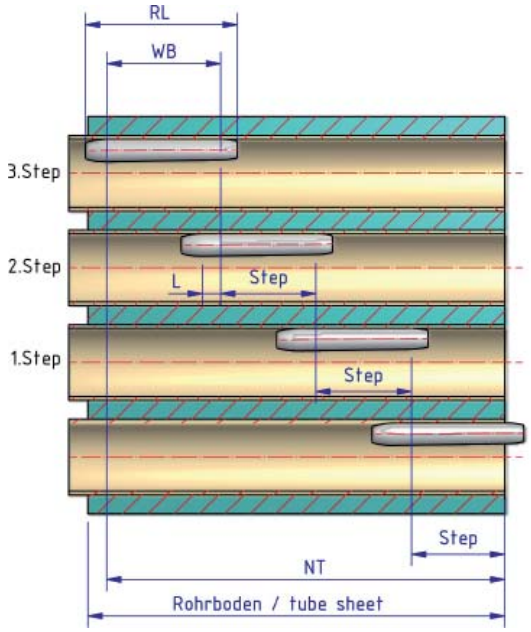


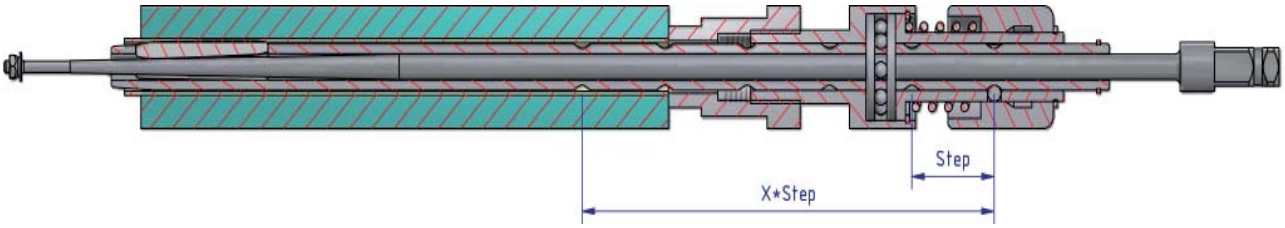


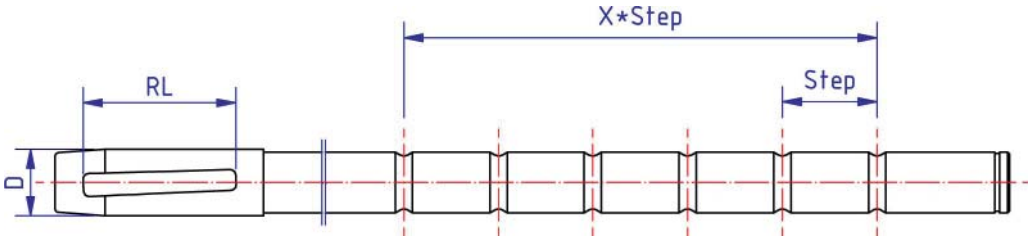


| D | RL | WB | L | Step | X | NT |
|---|---|---|---|---|---|---|
| 9,0-22,0 | 40 | 30 | 5 | 25 | 3 | 105 |
| 23,0-35,0 | 40 | 26 | 6 | 20 | 4 | 106 |
| 9,0-22,0 | 40 | 30 | 5 | 25 | 5 | 155 |
| 23,0-35,0 | 40 | 26 | 6 | 20 | 6 | 146 |
| 9,0-22,0 | 40 | 30 | 5 | 25 | 7 | 205 |
| 23,0-35,0 | 40 | 26 | 6 | 20 | 9 | 206 |
| | | | | | | |
| 10,6-22,0 | 60 | 50 | 5 | 45 | 2 | 140 |
| 23,0-35,0 | 60 | 46 | 6 | 40 | 2 | 126 |
| 10,6-22,0 | 60 | 50 | 5 | 45 | 3 | 185 |
| 23,0-35,0 | 60 | 46 | 6 | 40 | 3 | 166 |
| 10,6-22,0 | 60 | 50 | 5 | 45 | 5 | 230 |
| 23,0-35,0 | 60 | 46 | 6 | 40 | 5 | 246 |